3875 Cypress Drive Petaluma, CA 94954 800.228.2555 707.773.1100 Fax 707.773.1180 www.gcx.com

GCX Mounting Solutions

Wall Mount Kit for Welch Allyn®
Connex® Spot Monitor

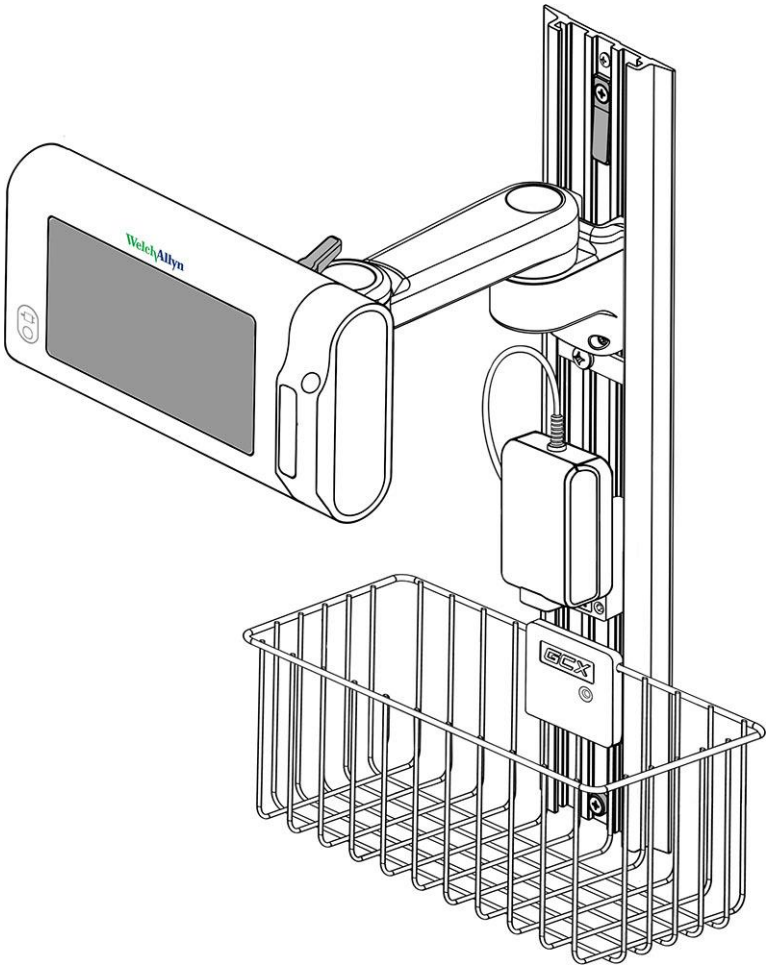

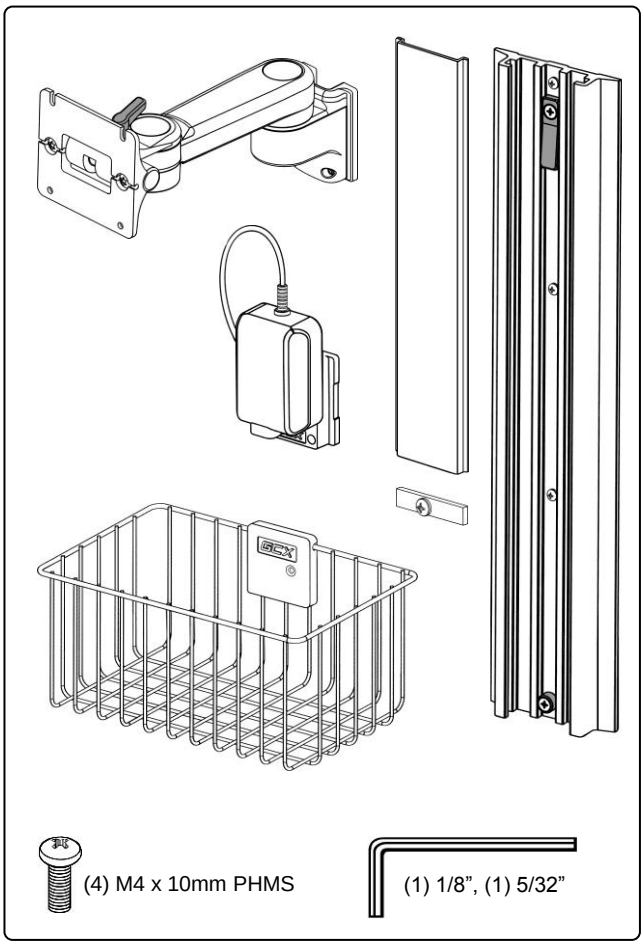

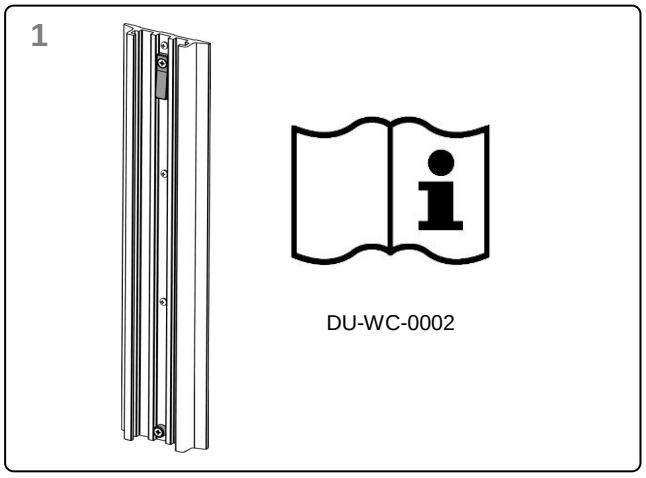

2

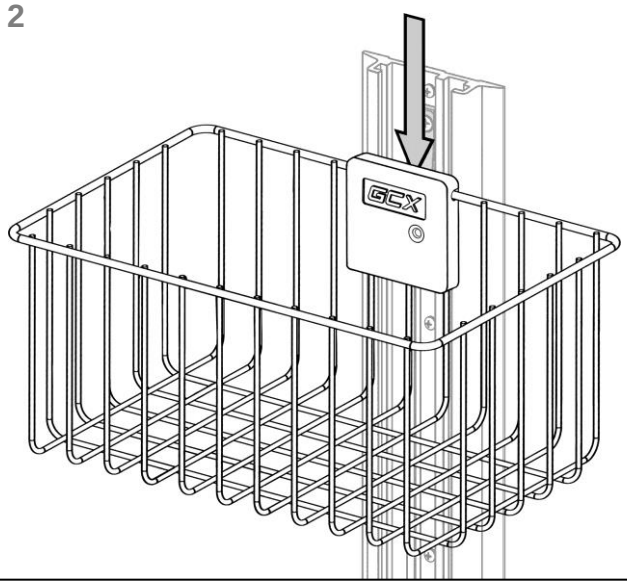

3

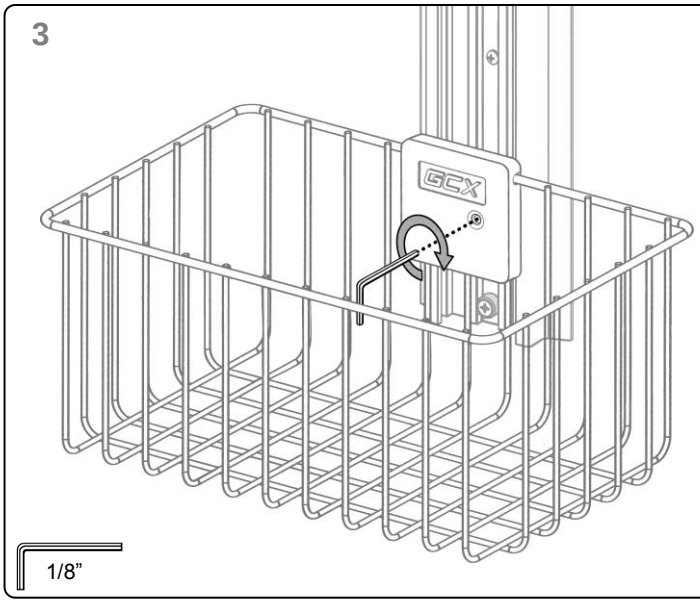

4

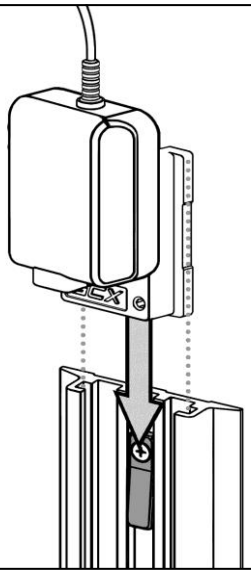

5

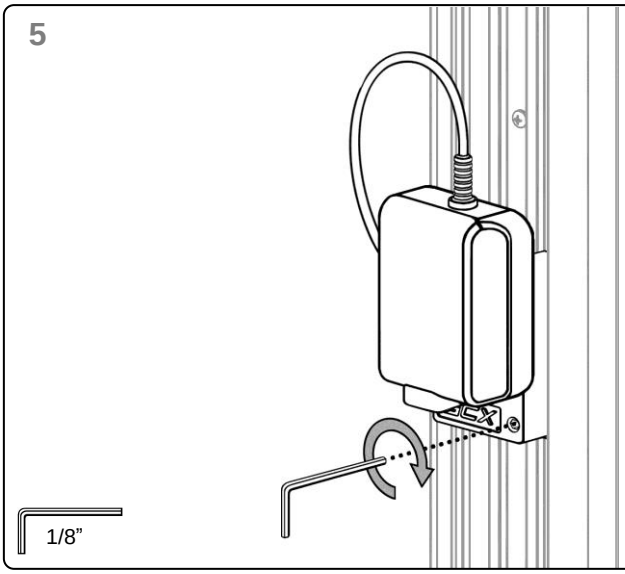

6

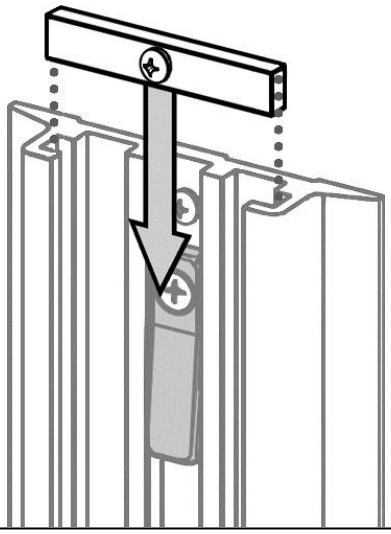

7

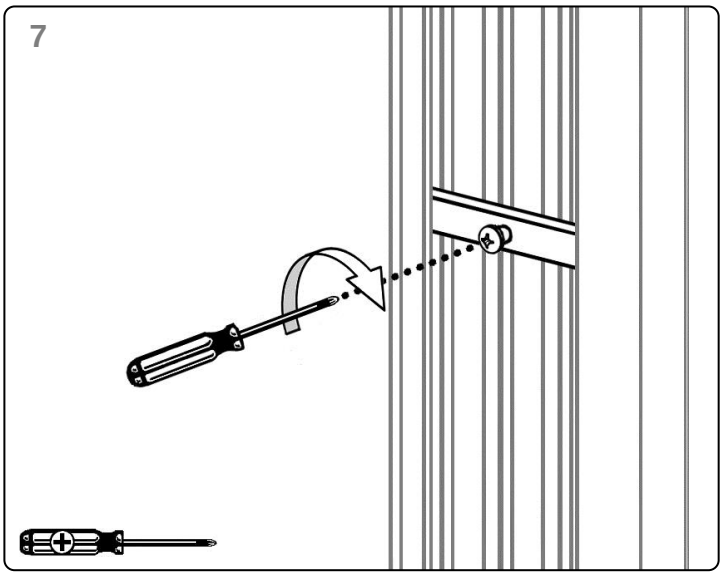

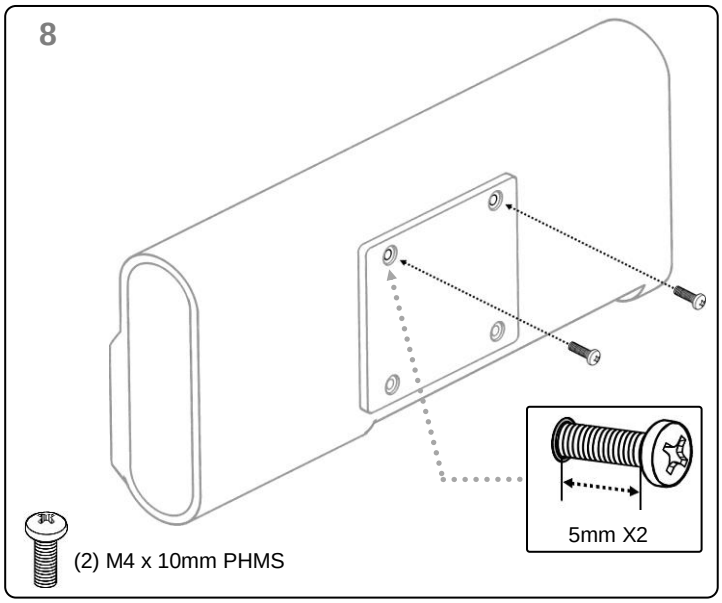
8
5mm X2
(2) M4 x 10mm PHMS

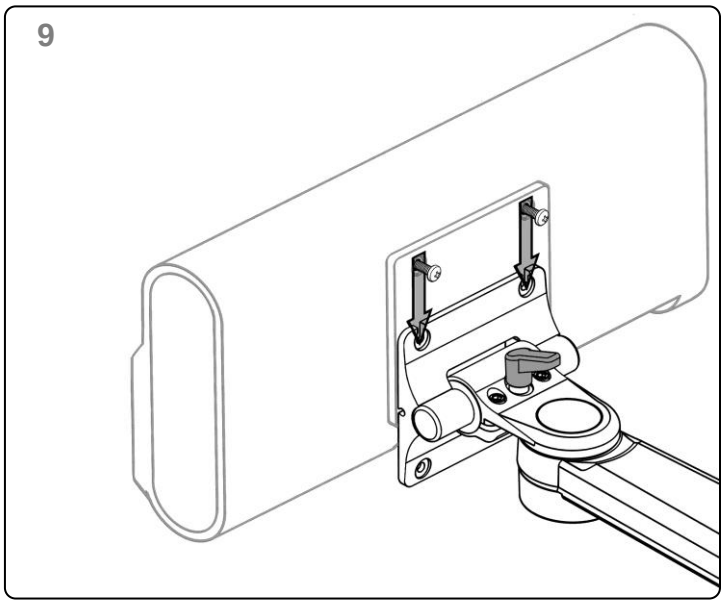
9

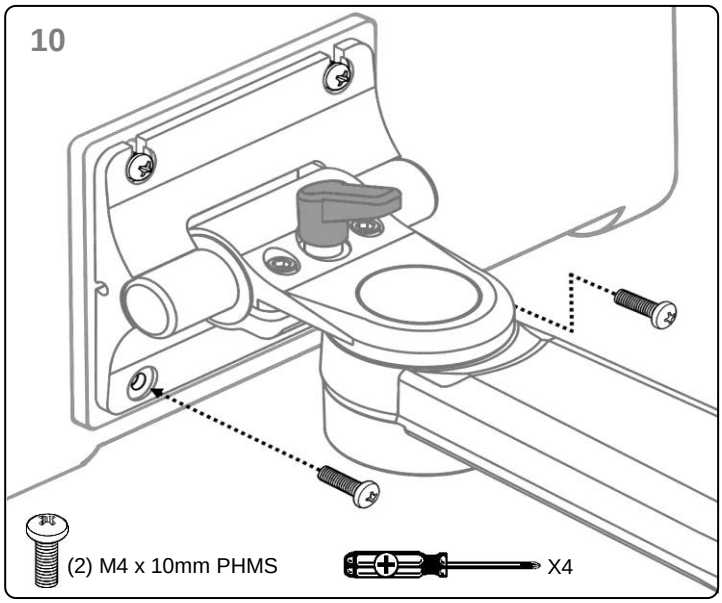
10
(2) M4 x 10mm PHMS
X4

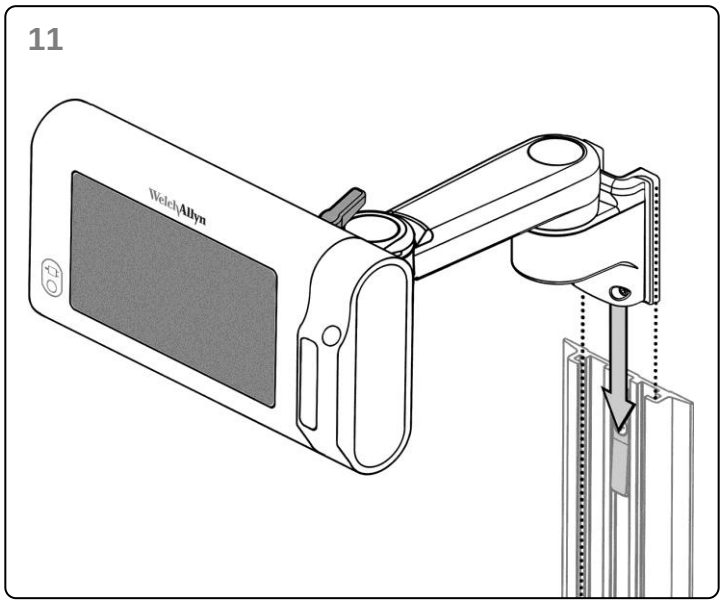
11
WelchAllyn

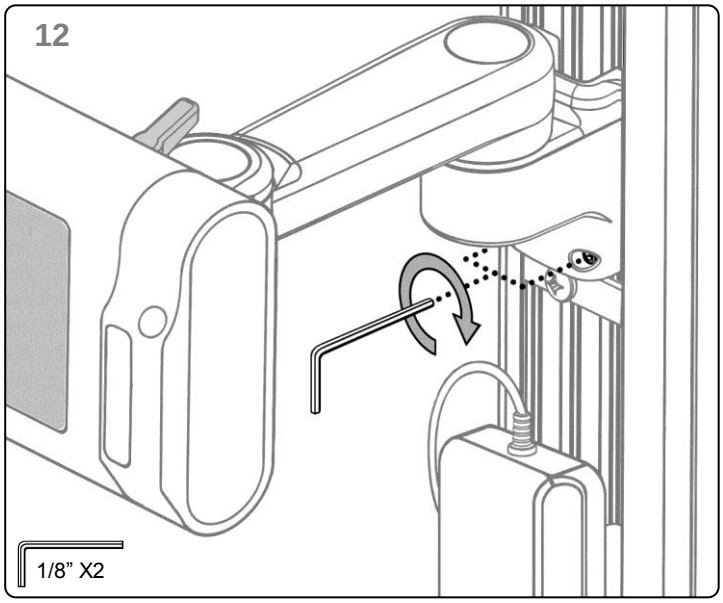
12
1/8” X2

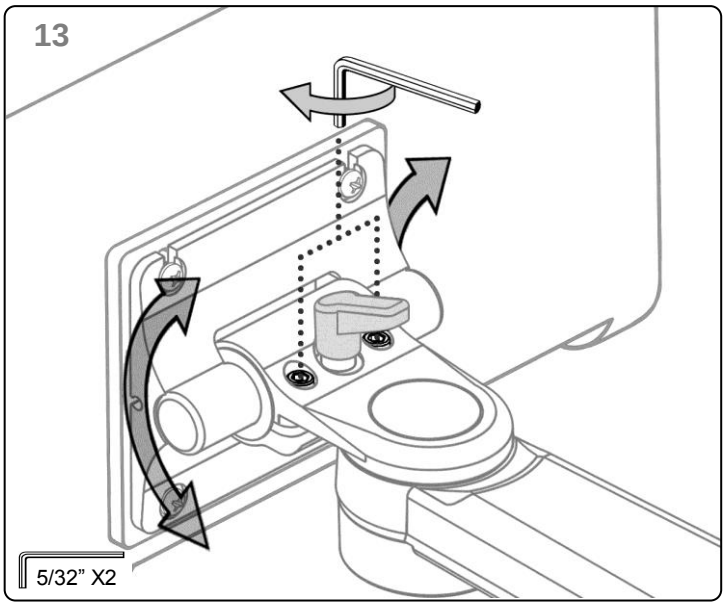
13
5/32” X2

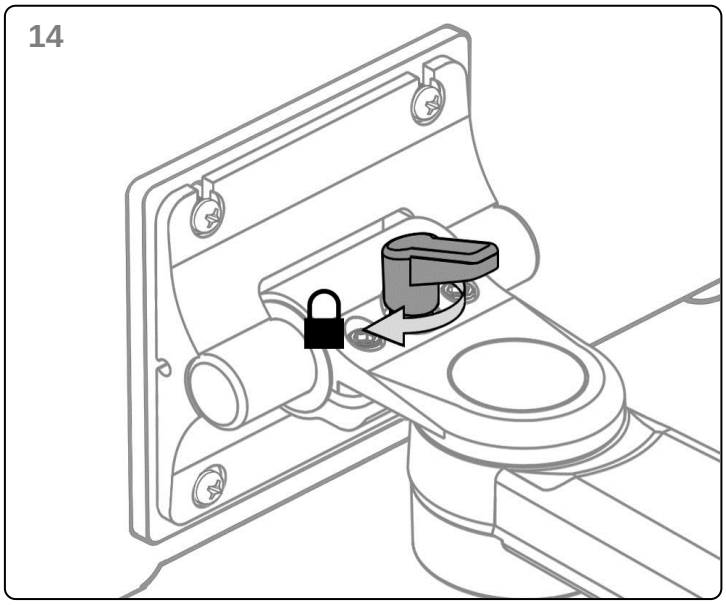
14

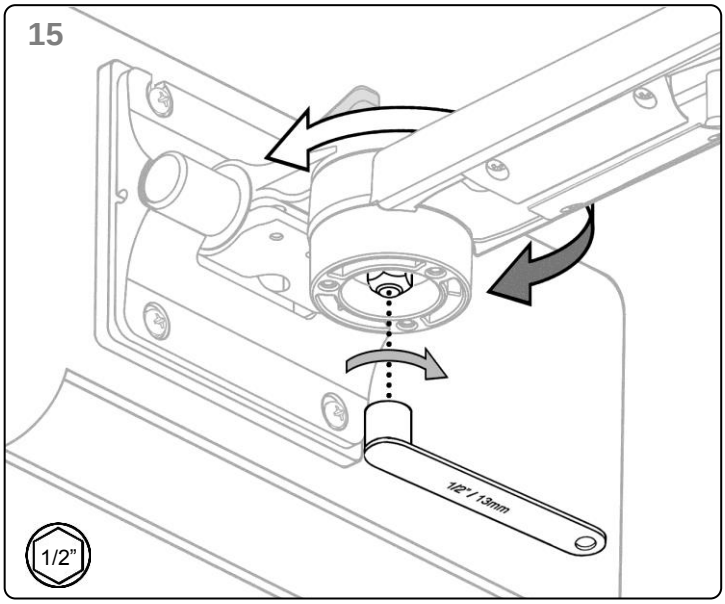
15
1/2” / 13mm
1/2”

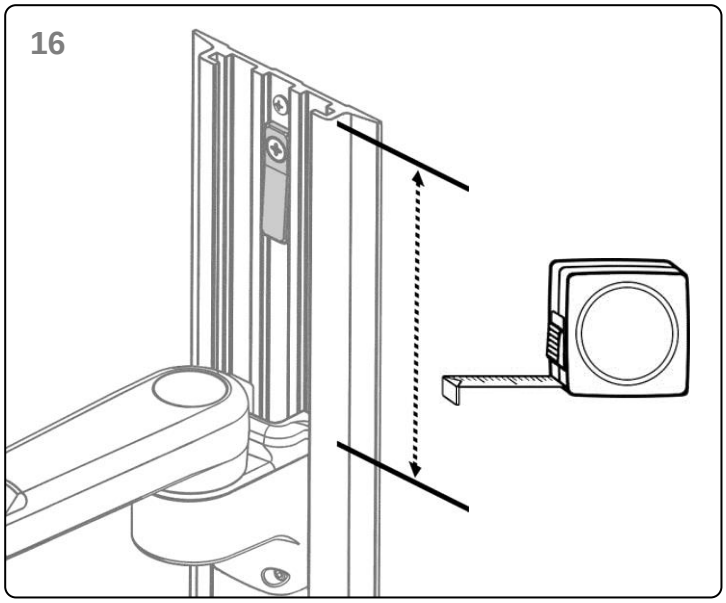
16

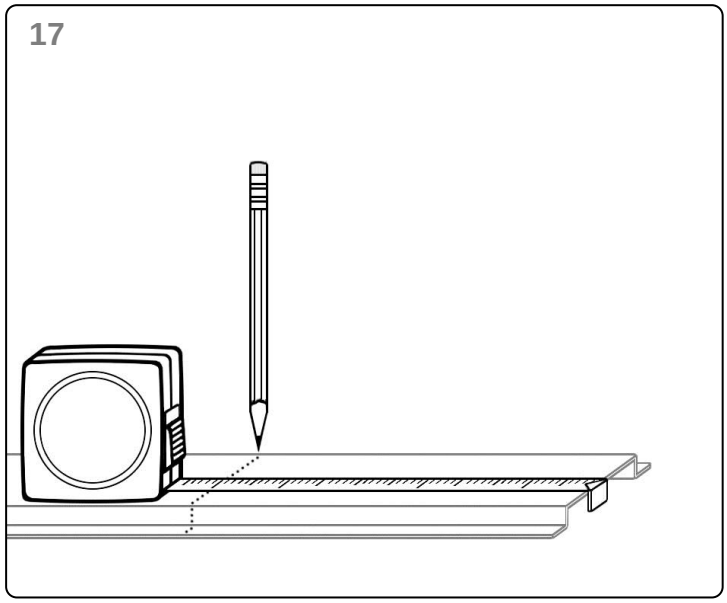
17

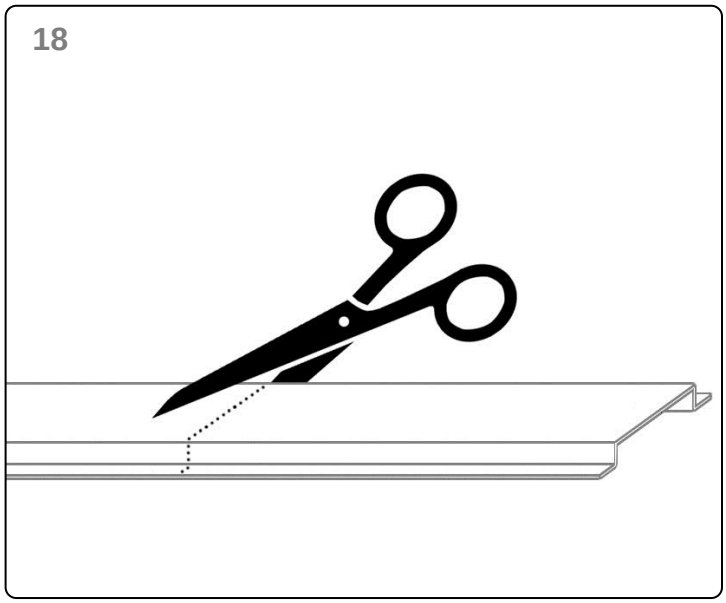
18

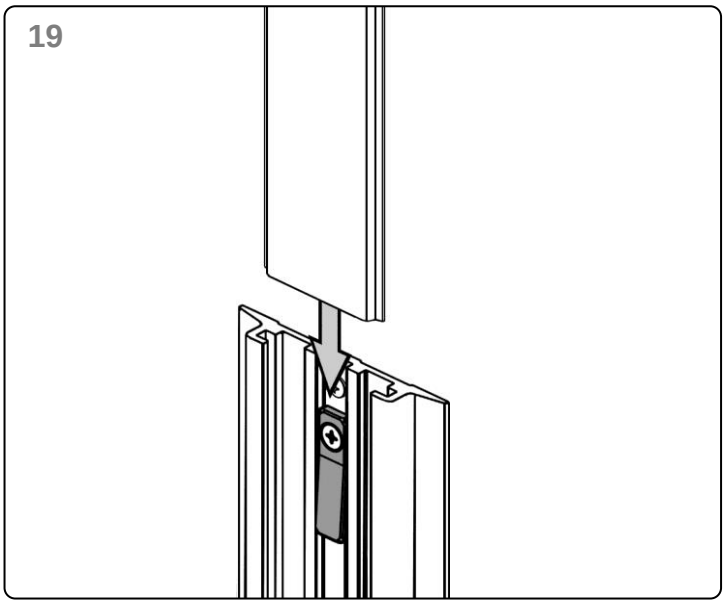
19